Flexibility in Collaborative Processes

March 30 – April 1, Santa Barbara, CA

Leonardo Luzzatto, COO

Rafael Bortolini, CPO

bpmNEXT

www.orquestrabpm.com

Orquestra BPMS

Orquestra BPMS

more than 10 years exclusively dedicated to BPM

more than 12 million new instances every year

more than 500 customers around Brazil

more than 300 thousand active users from various backgrounds

bpmNEXT

www.orquestrabpm.com

Orquestra BPMS

Process spectrum

Structured process management

Dynamic process management

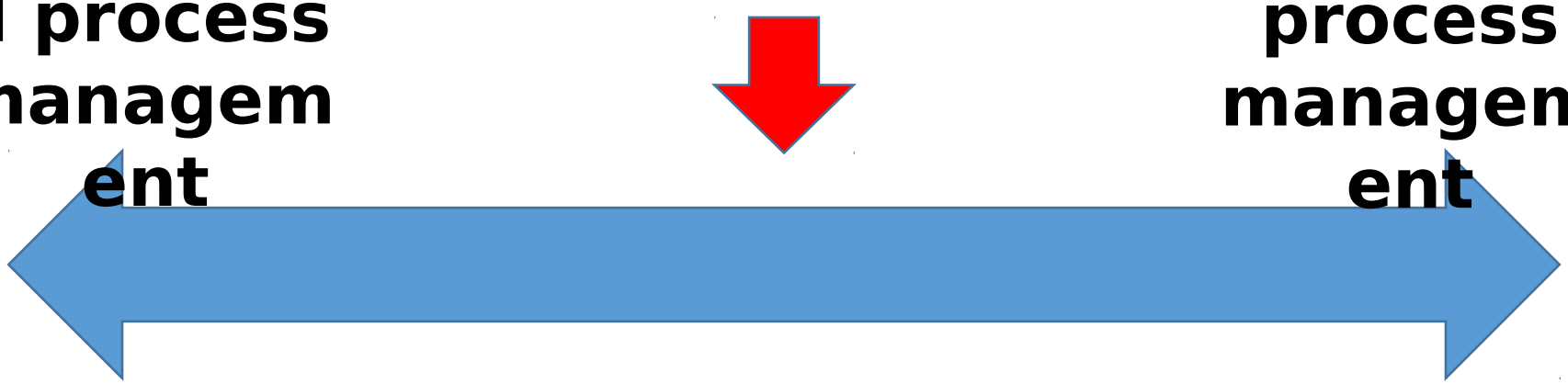

Business case

- Public hospital
- Serves more than 60K patients per year
- Buys more than US$ 500M in medications

Process scenario: purchase medications

Strutured view

- It’s taxpayers’s money: auditing and legal issues

Unstructured view

- It’s life and death: if you

bpmNEXT

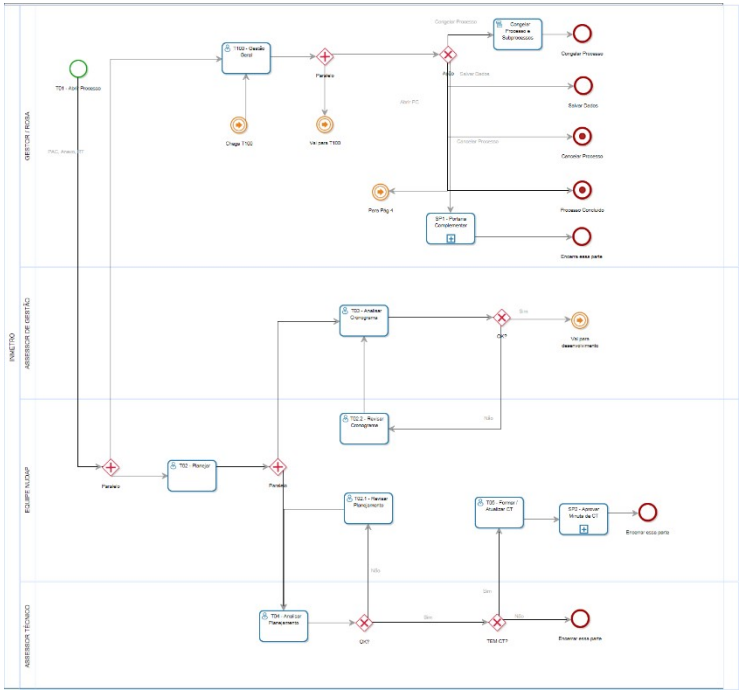

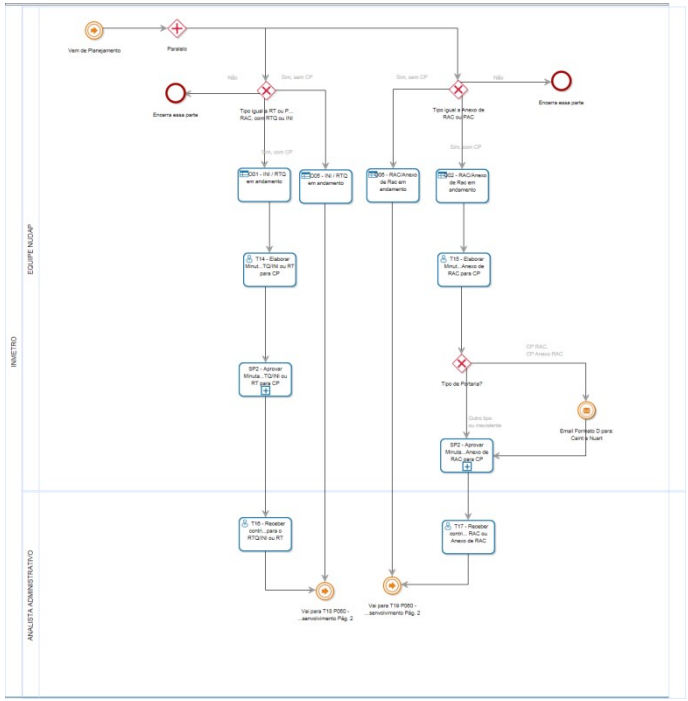

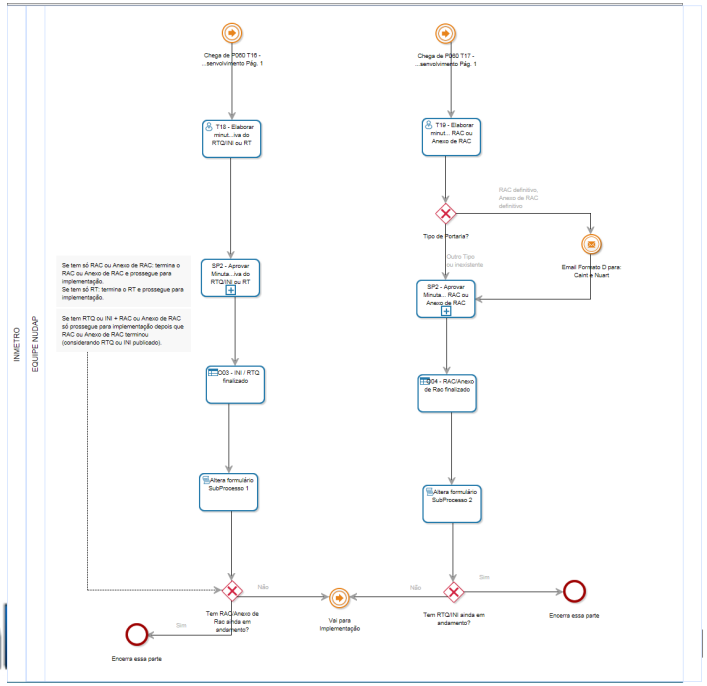

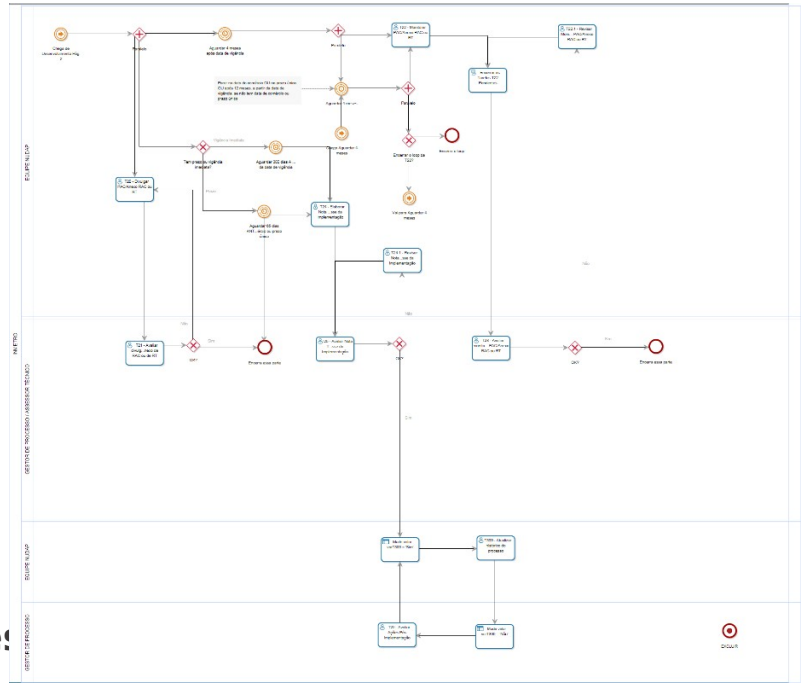

bpm

ues

estra
BPMS

Problem

How can I combine dynamic aspects to structured processes?

Could be…

Decision support

Help the business users to understand the process and the impact of their decisions

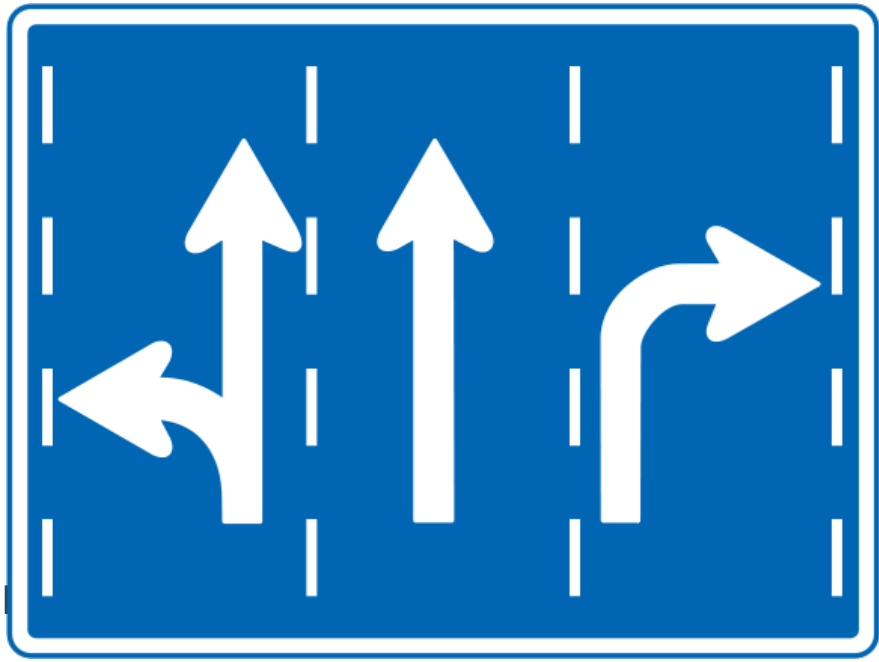

Flexible operations

Allow the business user to perform basic operations not modeled in the process

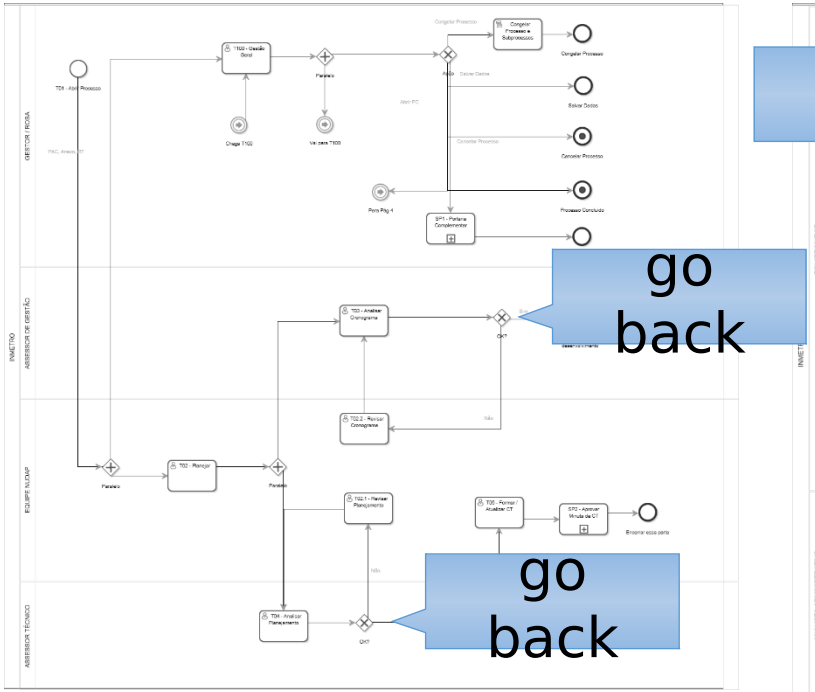

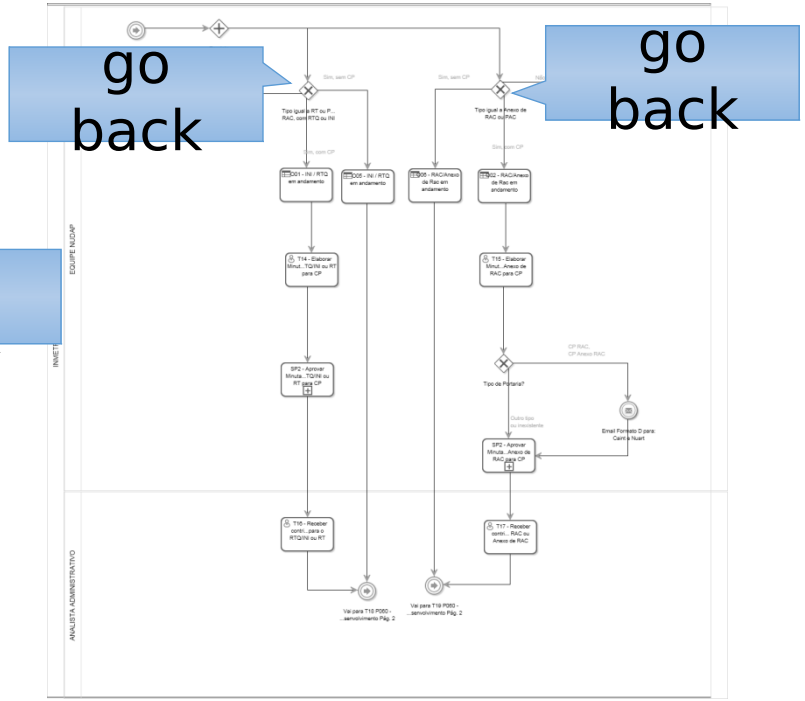

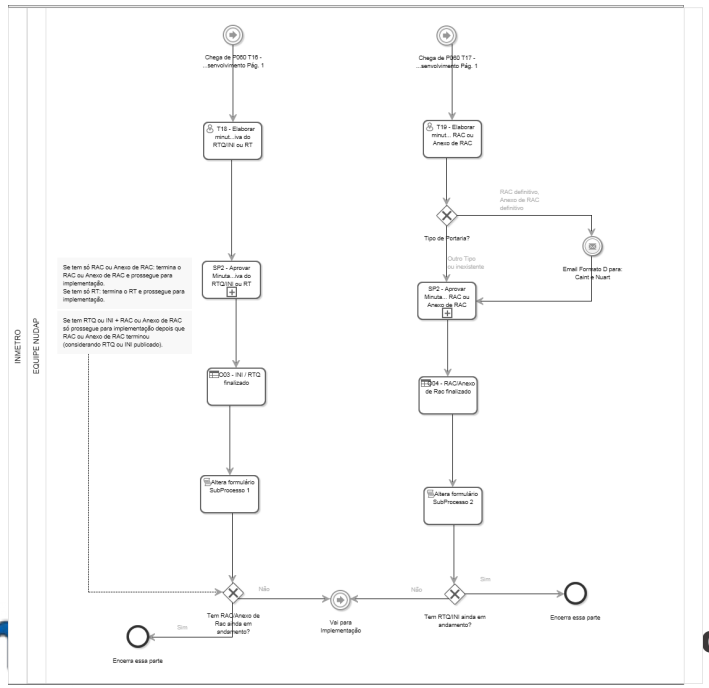

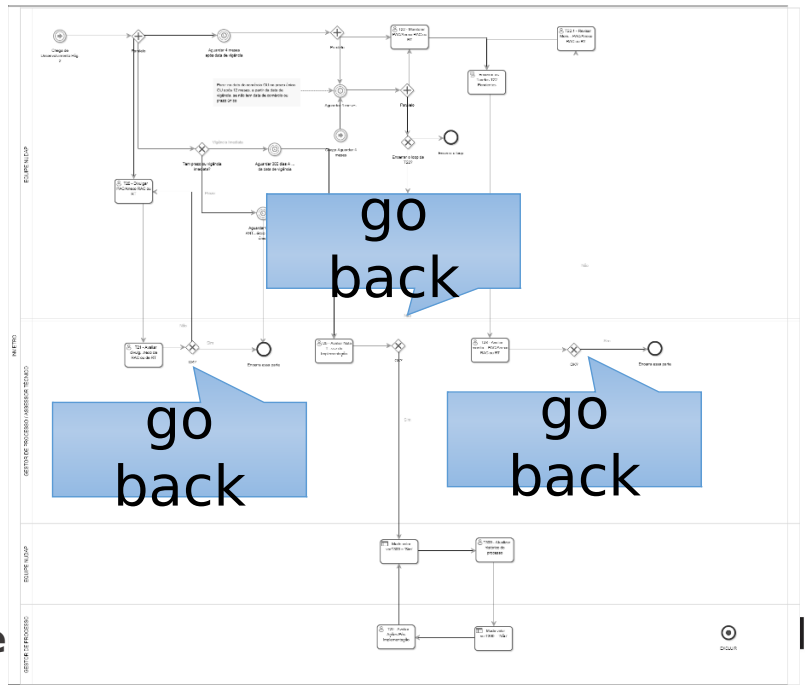

bpm que estra BPMS

Ad-hoc task execution

Allow the business user to define the path of the process, or define new paths

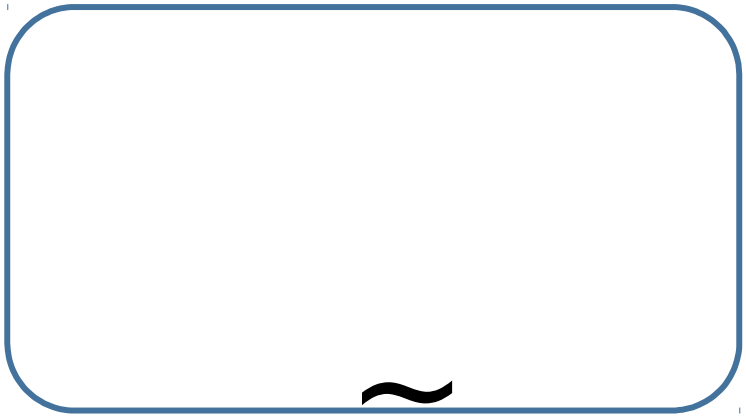

Live changes

Maintenance and evolution of process applications in an agile way or in real time

Security and audit trail

Track all modifications and ensure security in task execution

Focus on simplicity

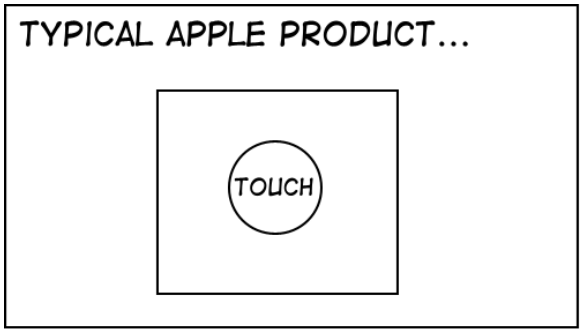

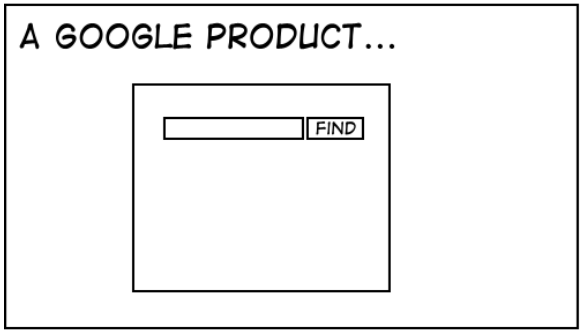

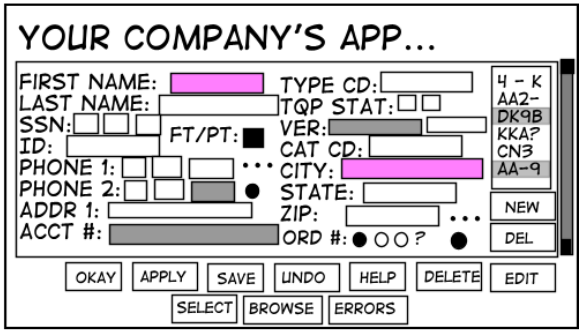

STUFFTHATHAPPENS.COM BY ERIC BURKE

bpmNEXT

Orquestra BPMS

Important concerns

- Who can do it ?
- Can do X Should do
- Process model version
- Audit old cases

flexibility **and** security

Process spectrum

Structured process management

Dynamic process management

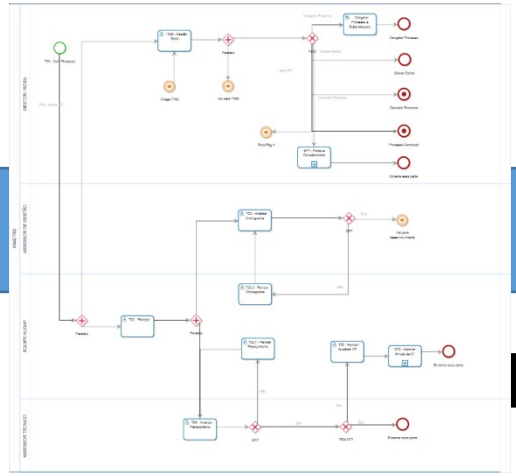

Security

Flexibility

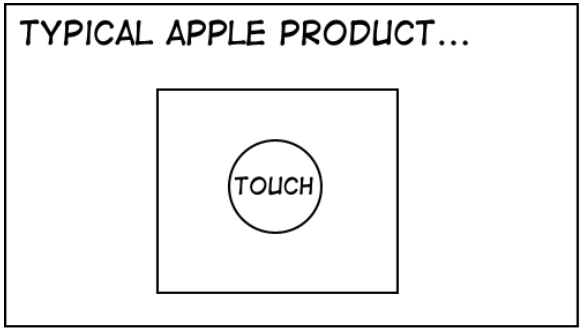

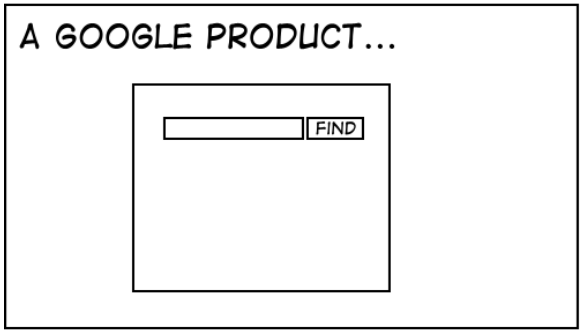

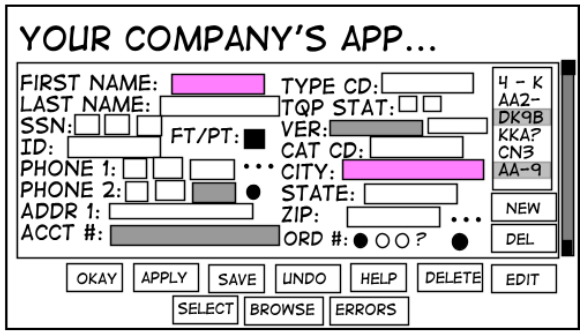

STUFFTHATHAPPENS.COM BY ERIC BURKE

Demo